Diritti riservati All rights reserved

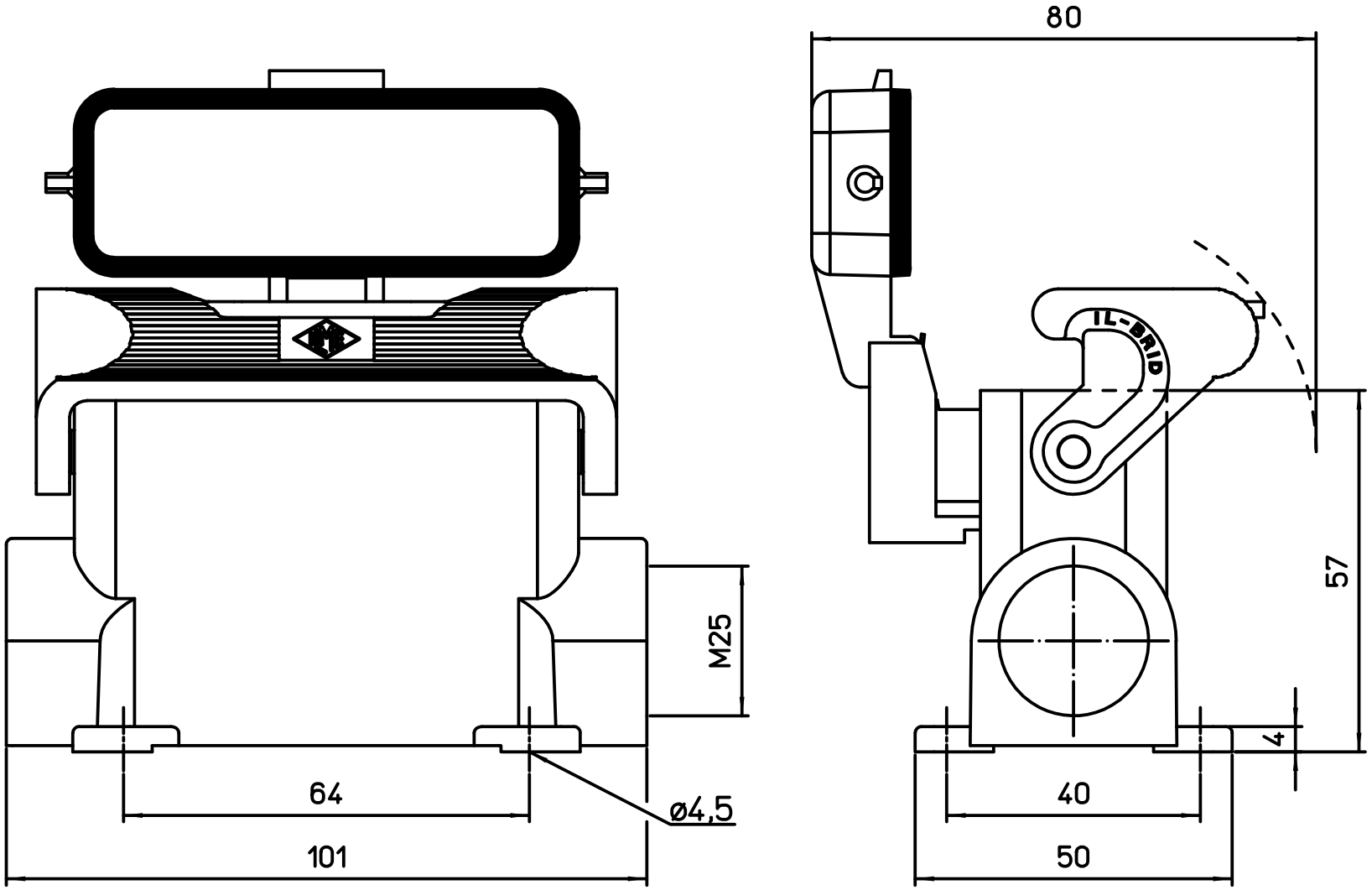


| | |
|---|---|
| dimensions in mm | |
| Date | 22/11/18 |
| Sign. | D.Cominelli |

MZAP 25 LS25

Surface mounting housing with single lever and cover, M25

Scale 1:1